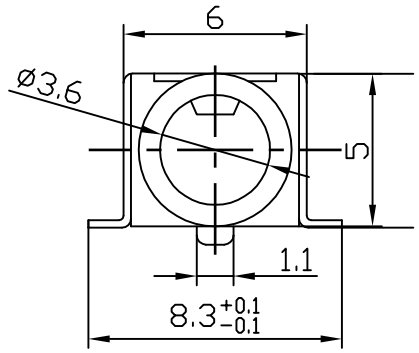

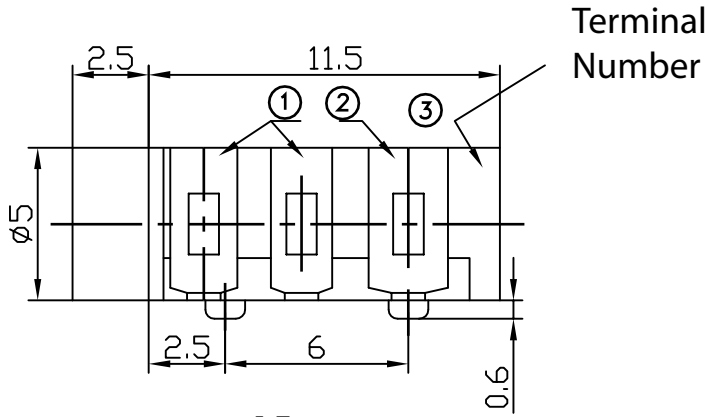

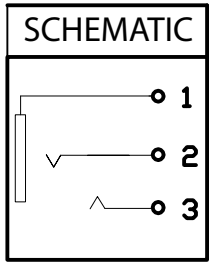

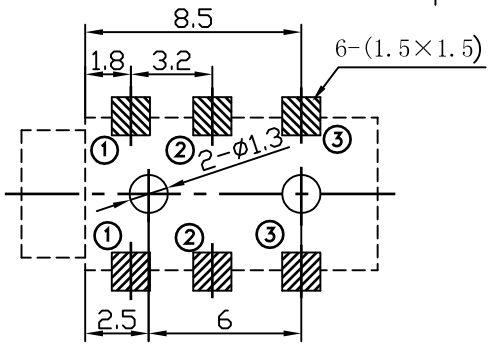

RECOMMENDED PCB LAYOUT

ELECTRICAL:
CURRENT RATING: 0.5A / 30 VDC Max.
CONTACT RESISTANCE: 30 milliohms initial; 50 milliohms after life test.
INSULATOR RESISTANCE: > 100Mohms
DIELECTRIC WITHSTANDING VOLTAGE: 500VAC FOR 1 Min..

MATERIAL:
INSULATOR : High Temperature Thermoplastic
CONTACT TERMINALS (#1,#2,#3, : Silver Plated Copper Alloy

S 8 1 3 - 0 6 0 0 - 0 2 X X - Z

TYPE NUMBER
07

BODY COLOR OPTION
0 - Black
3 - Pink
6 - Yelloe

RoHS COMPLIANT

PACKAGING
1 - Tape & Reel
3 - Plastic Bag

Rev		Drawn	Checked	Approved	Date
0	Issued	B.S.	S.M.	S.M.	01/06/12

SMP TECHNOLOGY, INC.

3.5mm Stereo Jack 14 mm (L) x 6.0 mm (W) x 5.0 mm (H);Black , Pink

Yellow Colors; Surface Mount

TOL. DEC. .X +/- 0.35 .XX +/- 0.25 .XXX +/- ANGLE +/- UNIT: mm

P/N: S 8 1 3 - 0 6 0 0 - 0 2 X X - Z